COPYRIGHT INFORMATION

REVISIONS

REV.	DESCRIPTION	DATE	APPROVED

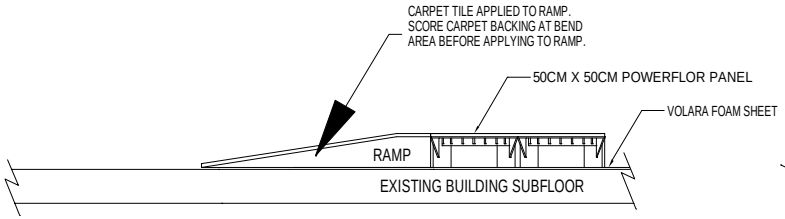

TYPICAL RAMP INSTALLATION

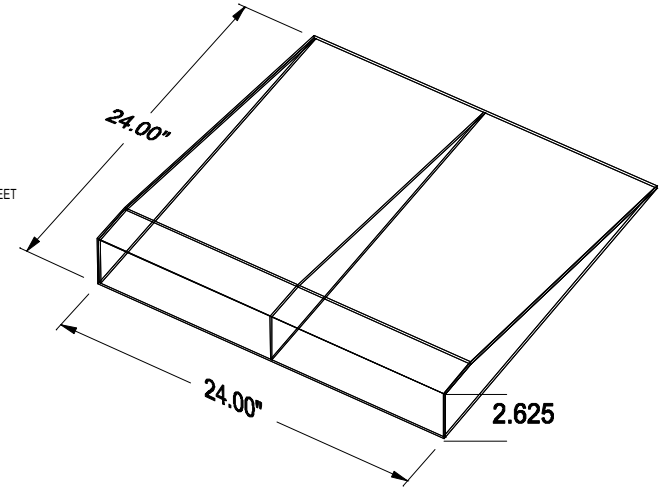

ADA HANDICAP RAMP

1. 11 GUAGE STEEL WELDED CONSTRUCTION WITH GUSSETS.
2. STANDARD RISE 1:8.
3. MEETS ADA REQUIREMENTS. FOR EXISTING SITES, BUILDINGS, & FACILITIES

CUSTOM PRODUCTS & SERVICES
6286 Claude Way E, Inver Grove Heights, MN 55076-4435
PH: 888-444-1202 (Toll Free) or 651-452-0113 Fax: 651-452-2264
E-mail: Info@custom-products.com
Website: www.custom-products.com

PARTS LIST

NEXT ASSY.	USED ON
APPLICATION	

UNLESS OTHERWISE SPECIFIED
DIMENSIONS ARE IN INCHES.
TOLERANCES ARE:
FRACTIONS ± DECIMALS .XX ± .XX .XXX ± .XXX ANGLES ± 1

MATERIAL

FINISH

CAD GENERATED DRAWING
DO NOT UPDATE MANUALLY

APPROVALS	DATE
DRAWN J.R.ECKHART	01/13/2016
CHECKED	

ADA RAMP 1/8 SLOPE

POWERFLOR USA, INCORPORATED
CABLE MANAGEMENT SYSTEMS

SIZE C DRAWING NO. 3-082424 REV.

SCALE: XX.X CAD FILE XXXX.XXX SHEET XX OF X